STD API650 STRENGTH CALCULATION

ROOF THICKNESS & DEFLECTION

INPUT DATA PGM RUN ***V1.0***

* Item Name	E-1004		* Description	PES21	
* Modulus of Elasticity of Roof stiffener, E	2052964	kg/cm²	* Live Load, WL	55	kg/m^2
* Allowable stress, σa	1066	kg/cm^2	* Snow Load, Ws	113	kg/m^2
* Roof Diameter, L	2200	mm	* Self Load, Wf	60	kg/m^2
* Distance of Roof Stiffener, W1	1100	mm	* Roof Used thickness, tu	6	mm
*Corrosion Allowance, C.A	1	mm			

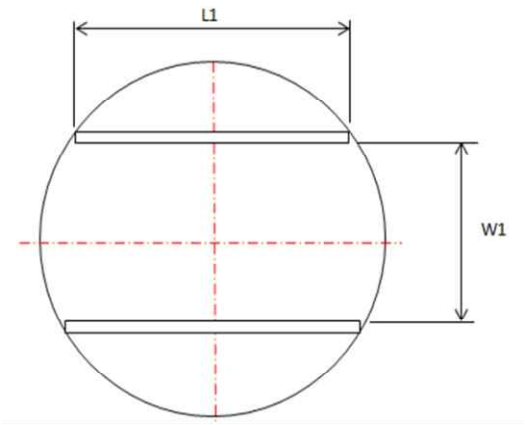

RESULT OF CALCULATION

* DESIGN PRESSURE (WF+WL+WS)	228.0	kg/m^2	* DISTANCE OF STIFFENER(max) _Length side	0.0	mm
* Factor depending on Ration of W1/L	0.006		* MIN. THk of Plate (corroded), tmin	5.0	mm
* Required Thickness,treq = 2.45*L1√ α*w/S + C.A =	1.00	mm	* Used thickness, Check	O.K	
* Deflection of Roof Plate, y = α*w*L1^4 / (E*tmin^3) =	0.78	mm	* Deflection Check, ≤ tmin/2	O.K	

MENU PAGE-->>

Copyright ⓒ 2001 PES21 All rights reserved.
Please contact E-mail ***pes21@pes21.com***